University of South Florida
Society of Aeronautics and Rocketry

Flight Readiness Report

NASA Student Launch Initiative // MAV Challenge

Agenda

Vehicle Criteria

- Subsystems
- Motor Selection
- Simulations
- Testing and Verification Plans

AGSE Overview

- Subsystems
- Testing and Verification Plans

Project Overview

- Safety
- Budget
- Educational Engagement
- Next Steps

VEHICLE OVERVIEW

Vehicle Overview

Dimensions

- Length: 138 inches
- Diameter: 4 inches
- Weight (Loaded/Dry): 22.8 lbs/17.1 lbs

Materials

- G12 Fiberglass Airframe
- G10 Fiberglass Fins
- Phenolic Couplers
- Baltic Birch Bulkheads and Centering Rings
- Plastic Nosecone

Subsystems

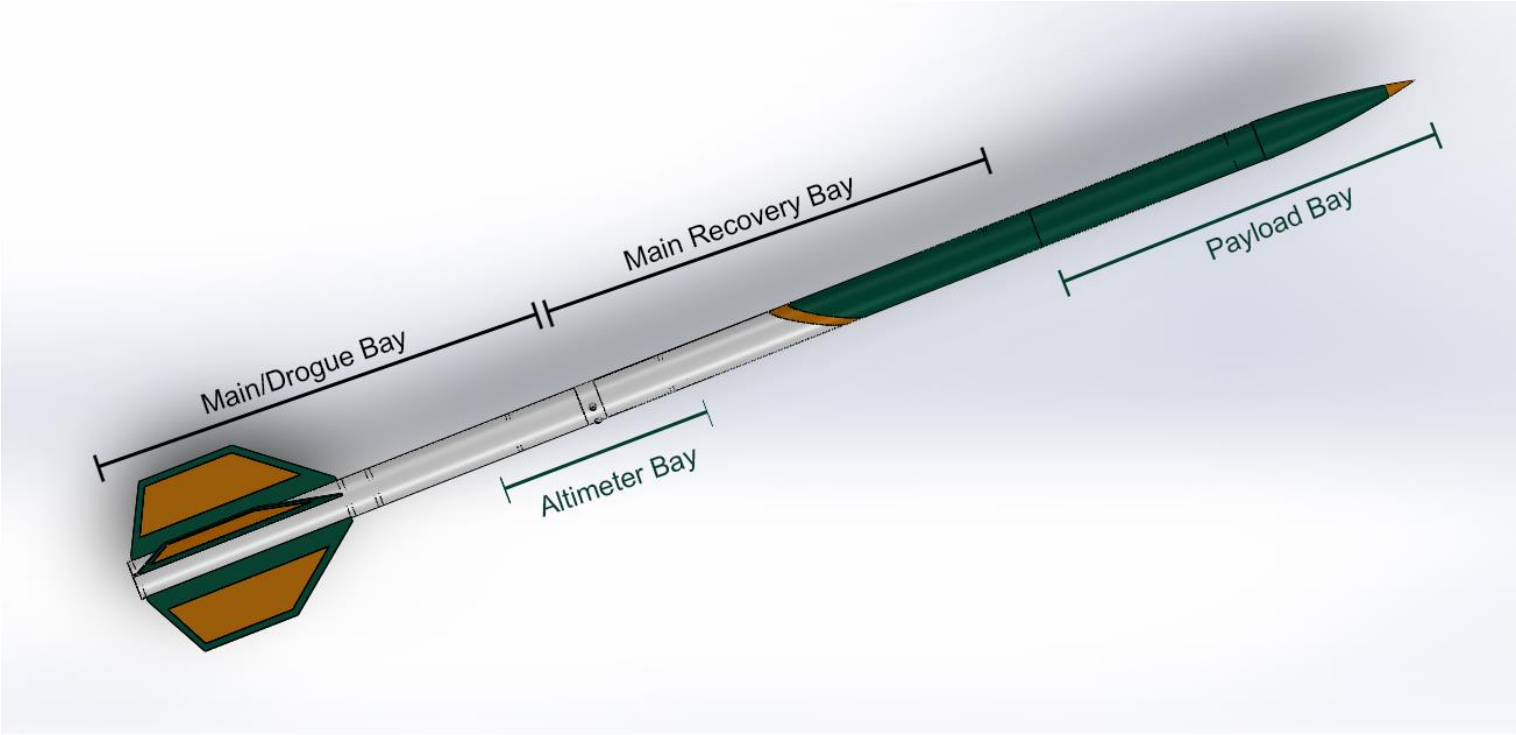
Main/Drogue Bay
Main Recovery Bay
Payload Bay
Altimeter Bay

Subsystems (Altimeter Bay)

- 16” Phenolic Coupler
- Baltic Birch Bulkheads
- RRC3 Altimeters
- Black Powder Charges
- Dual Deployment

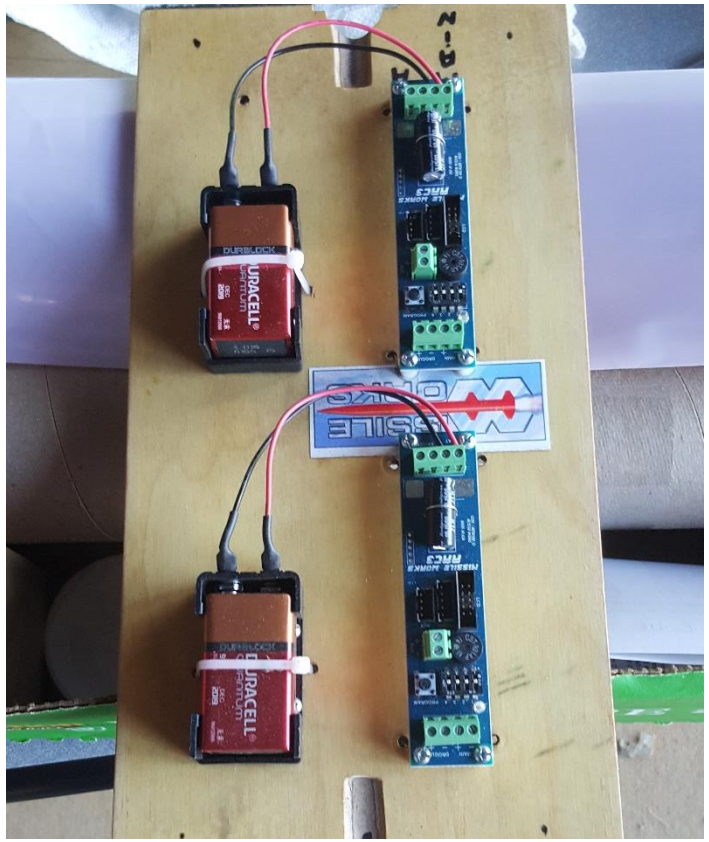

Subsystems (Recovery)

- Slow cure epoxy and carbon fiber bonding of shock cord to motor mount.

Subsystems (Recovery)

Parachute	Load Capacity	Surface Area	Drag Coefficient	Suspension Line	Net Weight	Packed Length
Cert-3 Large	16.2 – 35 lbs	57 ft^2	1.26	80 in	34.0 oz	17 in
Cert-3 Drogue	1.0 – 2.2 lbs	6.3 ft^2	1.16	24 in	6.0 oz	<7 in

Subsystems (Recovery)

Wind Speed (mph)	Lateral Drift (ft) 500 ft Deployment	Lateral Drift (ft) 800 ft Deployment
5	786.22	889.43
10	1572.45	1778.86
15	2358.67	2668.29
20	3144.90	3557.72

Mass Statement

Section	Mass (lbs)
Nosecone	1.925
Payload/Electronics	2.59
Fore Airframe	4.445
Fin Can	8.145
Motor	6.1

Motor Selection

Motor Selected	**CS L910s**
Maximum Thrust	**1086.1 N**
Average Thrust	**907.10 N**
Thrust-to-weight ratio (Total)	**8.93**
Motor Diameter	**75 mm**

Rail Exit Velocity: 82.3 ft/s

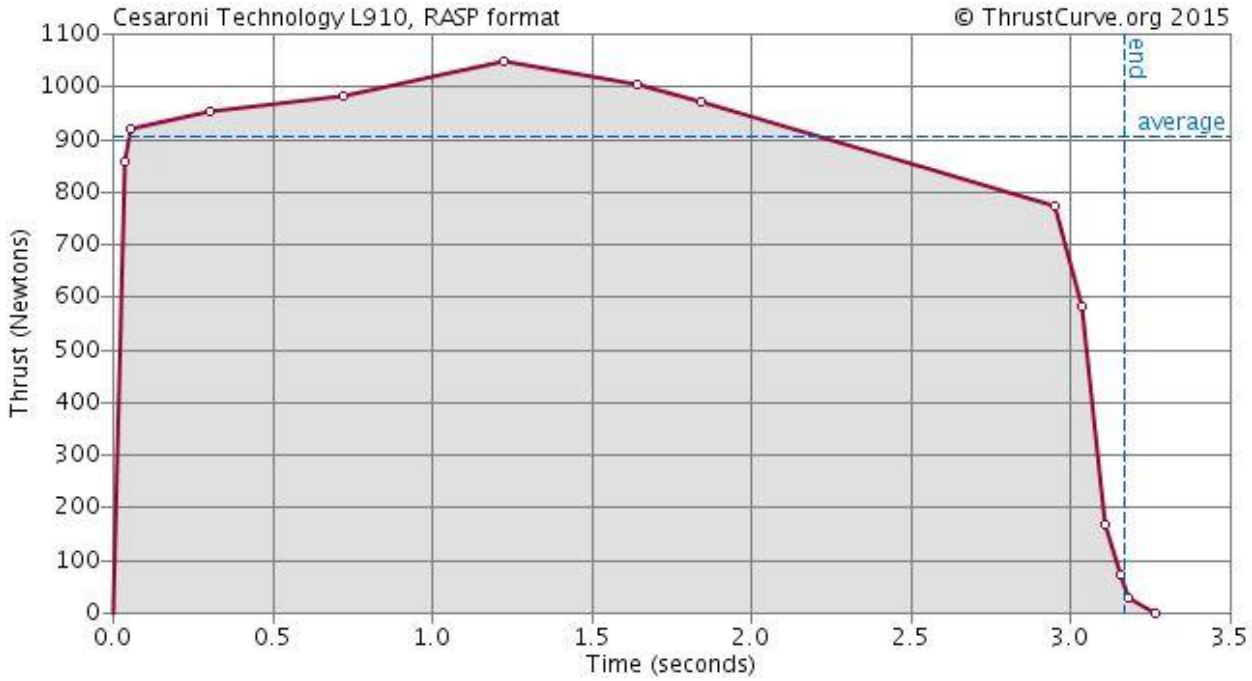

Simulations (Stability)

Simulations (Stability)

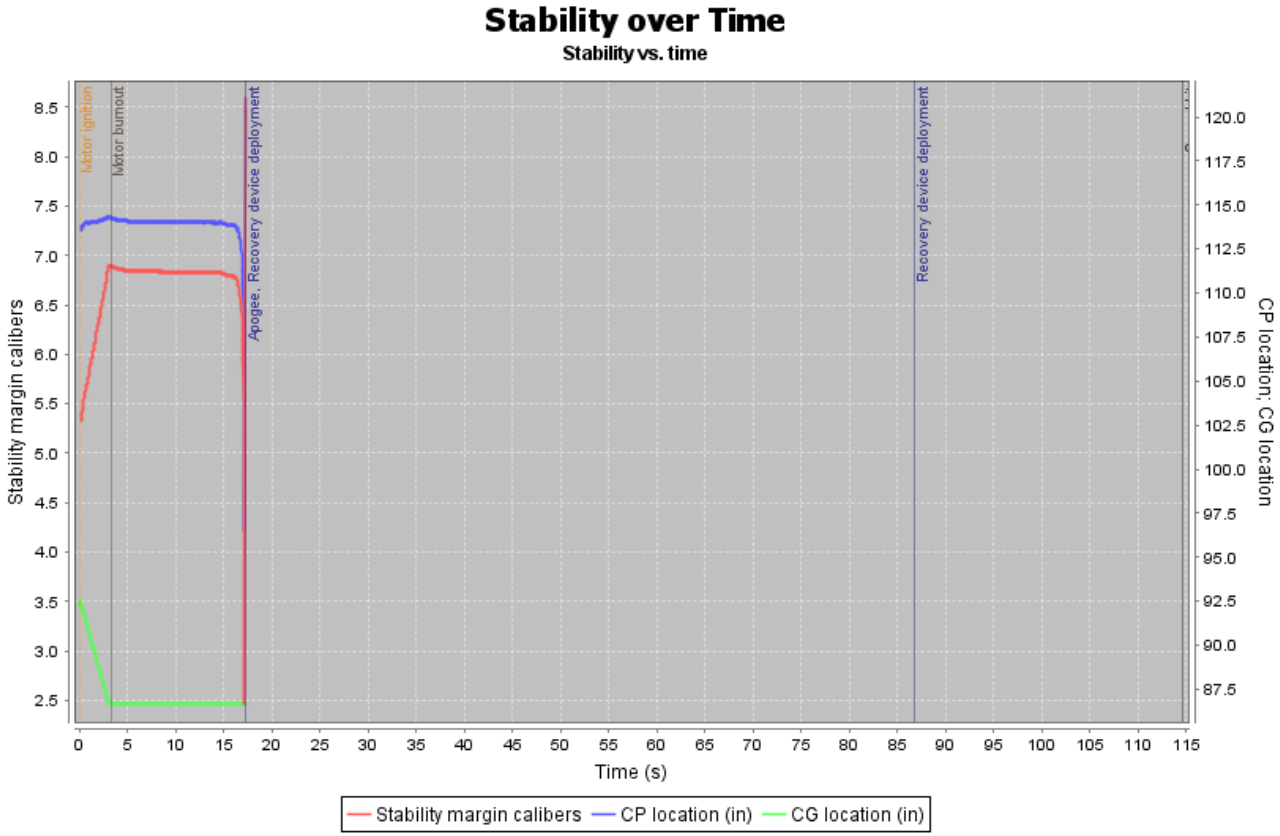

Testing and Verification

Requirement	Design and Verification
All teams shall successfully launch and recover their full-scale rocket prior to FRR in its final flight configuration.	• Design a 3:4 scale rocket • Run OpenRocket Simulation • Perform Mission Analysis Post-Flight
Prepare Launch Vehicle within 2 Hours	• Practice Vehicle Preparation with Checklists • Inspect for potential delays
The vehicle shall deliver the payload to an apogee altitude of 5,280 feet above ground level (AGL).	• Design for altitude • Motor Selection • OpenRocket Simulation • Test Flight
The launch vehicle shall be designed to be recoverable and reusable.	• Design for reusability • Inspect Recovery Systems
Recovery system successfully cause separation and the ejection of both the drogue and main chutes.	• Design for recovery • Test black powder charges prior to launch • Ensure proper parachute packing. • Inspect for verification

TESTING

Subscale Launch

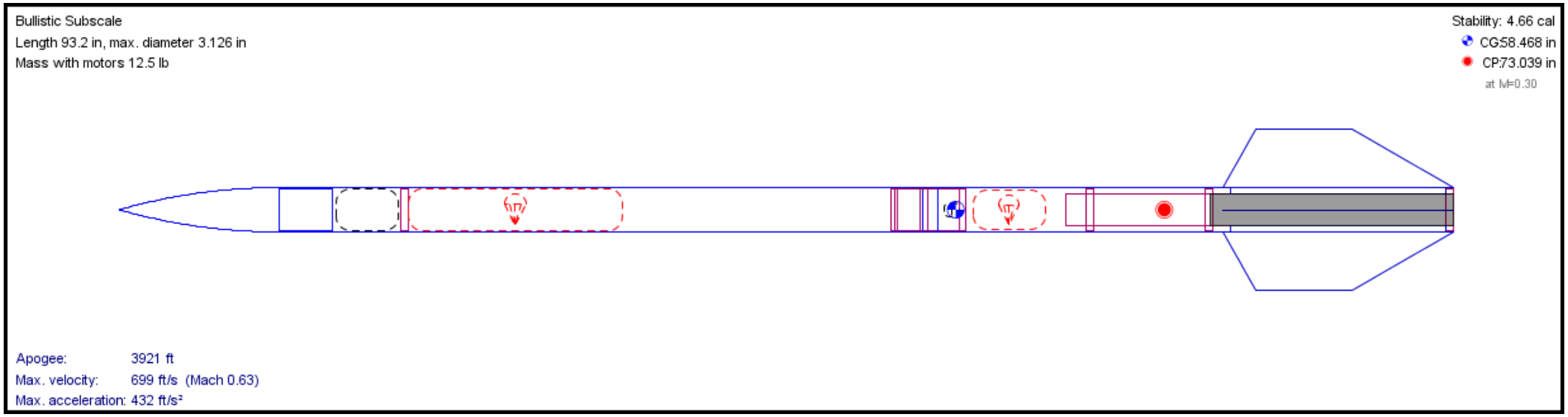

Subscale Launch

Launch Vehicle Specifications	
Motor	K630WC
Length (in)	93.2
Mass (Loaded/Empty) (lbs)	12.5/9.27
Projected Altitude (ft)	5026
Actual Altitude (ft)	6262
Projected Max Velocity (ft/s)	734
Stability (cal)	4.66

- Simulation, OpenRocket vs Rocksim
- Stability Adjustment
- Testing Analysis and Conclusions

Fullscale Launch

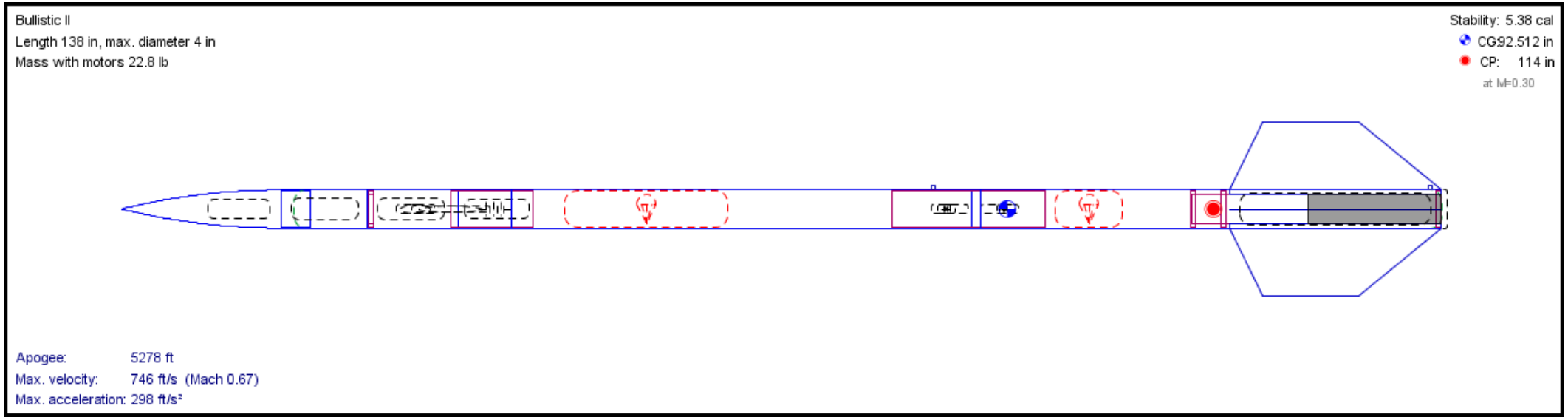

Fullscale Launch

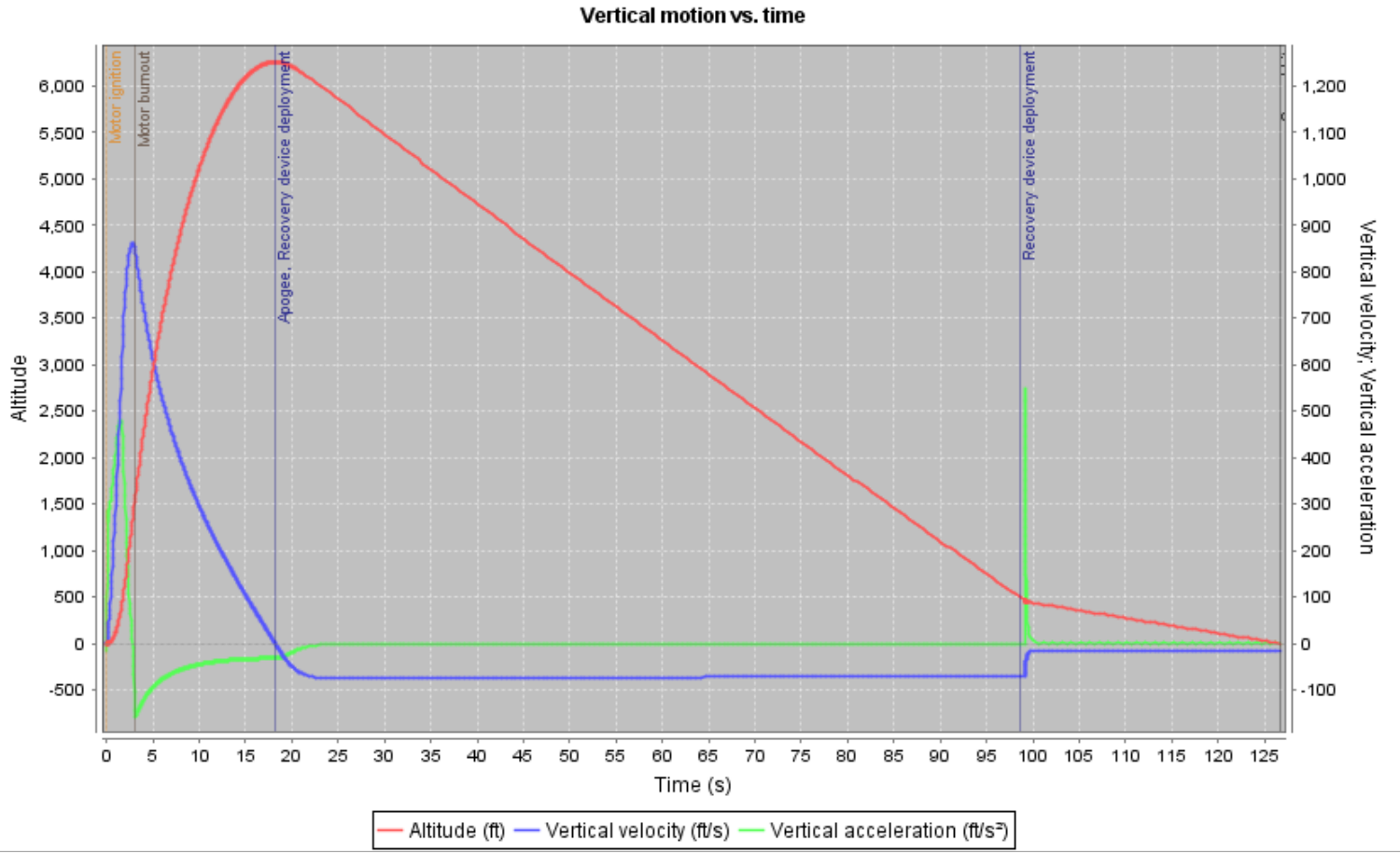

Fullscale Launch

Launch Vehicle Specifications	
Motor	L1112
Length (in)	138
Mass (Loaded/Empty) (lbs)	24.8/17.2
Projected Altitude (ft)	6250
Projected Max Velocity (ft/s)	856
Stability (cal)	4.85

- Simulation Results
- Results Scaling
- Testing Analysis and Conclusions

AGSE OVERVIEW

AGSE Rail

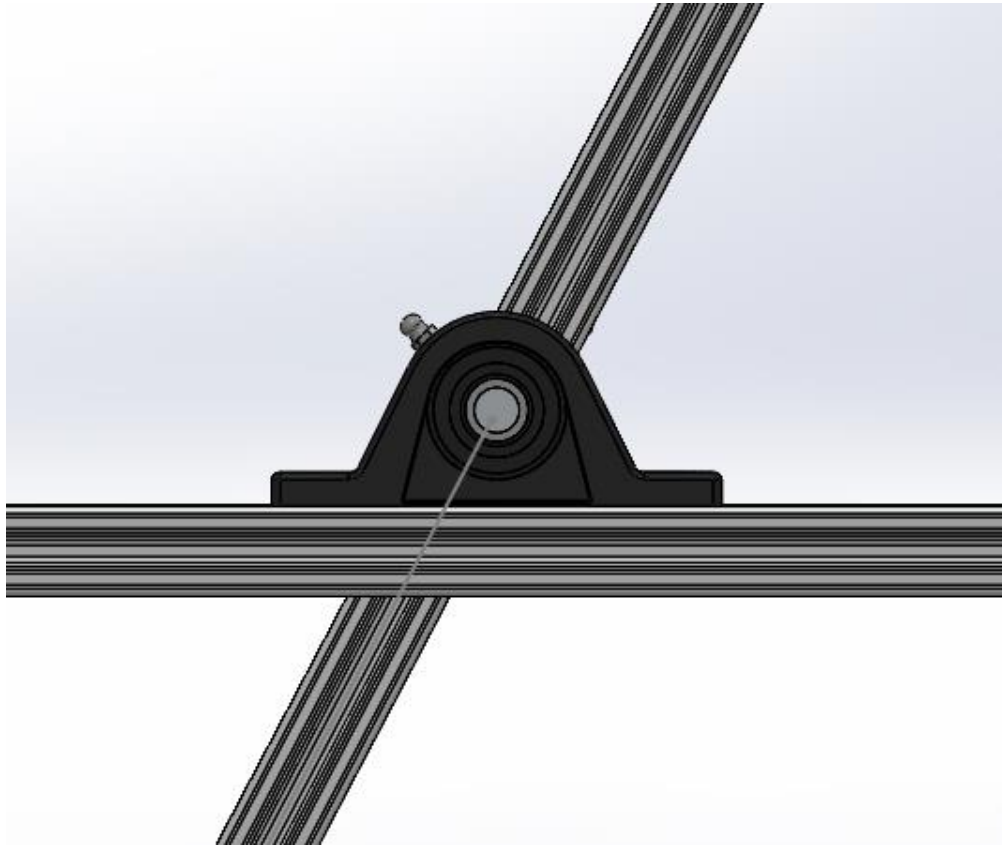

AGSE Rail

Input Voltage	12V DC
Stroke (Movement)	30"
Force	350lbs (1500N)
Speed (mm/sec)	5mm/sec
IP Rating (Protection Class) - IP54	*Ingress of dust is not entirely prevented, but it must not enter in sufficient quantity to interfere with the satisfactory operation of the equipment *Water splashing against the enclosure from any direction shall have no harmful effect
Operational Temperature	-4°F ~ +149°F
Noise	<45db
Limit Switch	Built in, Non-Adjustable
Current	6.5 Amps
Mounting Hole	6mm
Fully Retracted	34 1/4"
Full Extended	64 1/4"
Cycle	25%
Warranty	12 Months

AGSE Capture

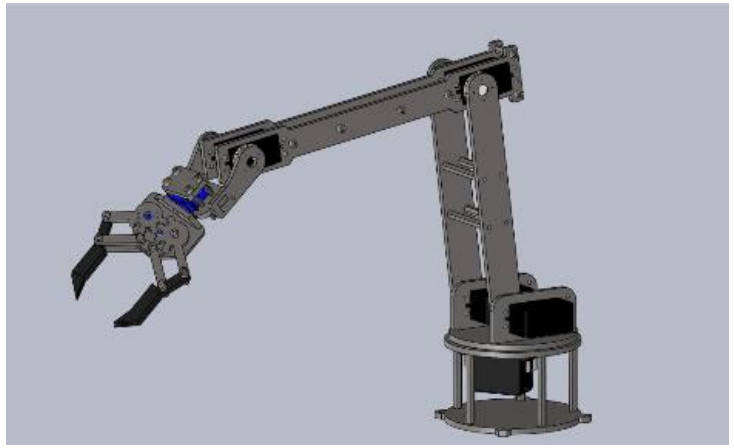

- Laser cut Birch Prototyping
- Servo selection and Integration
- Fabrication
- Joint Design
- Arm Scaling

AGSE Capture

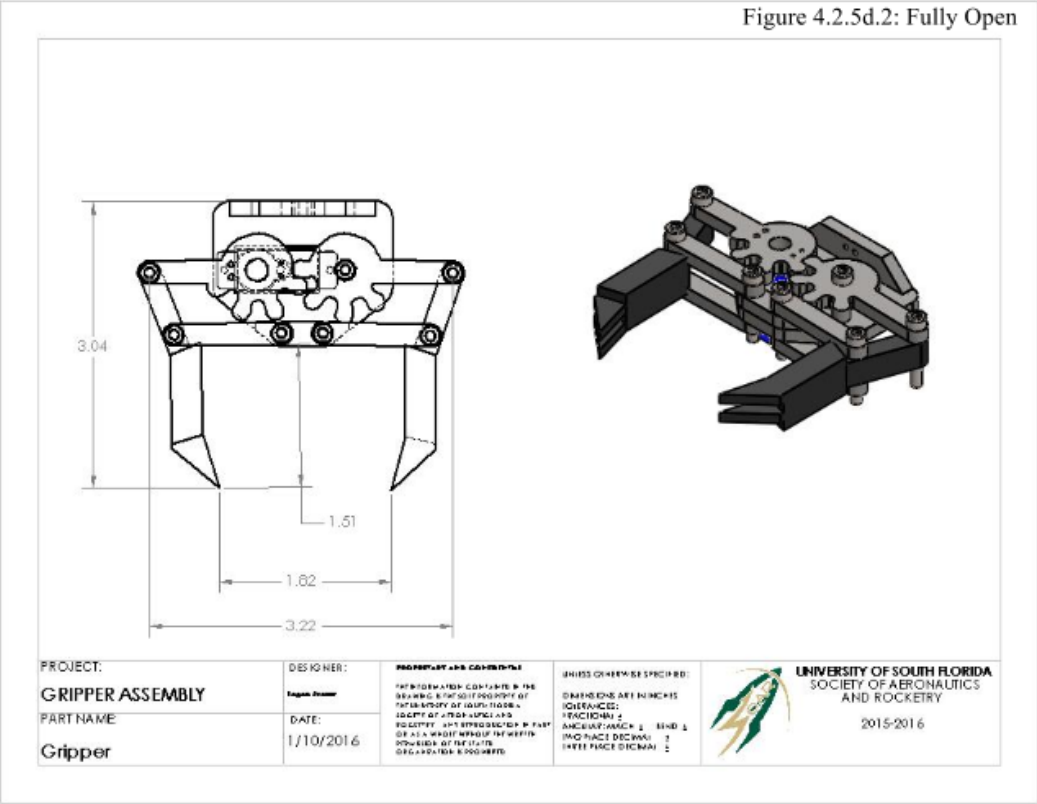

- Overall Gripper design
- 3-D Printed Gripper Claws
- Fabrication Techniques

AGSE Process Flow

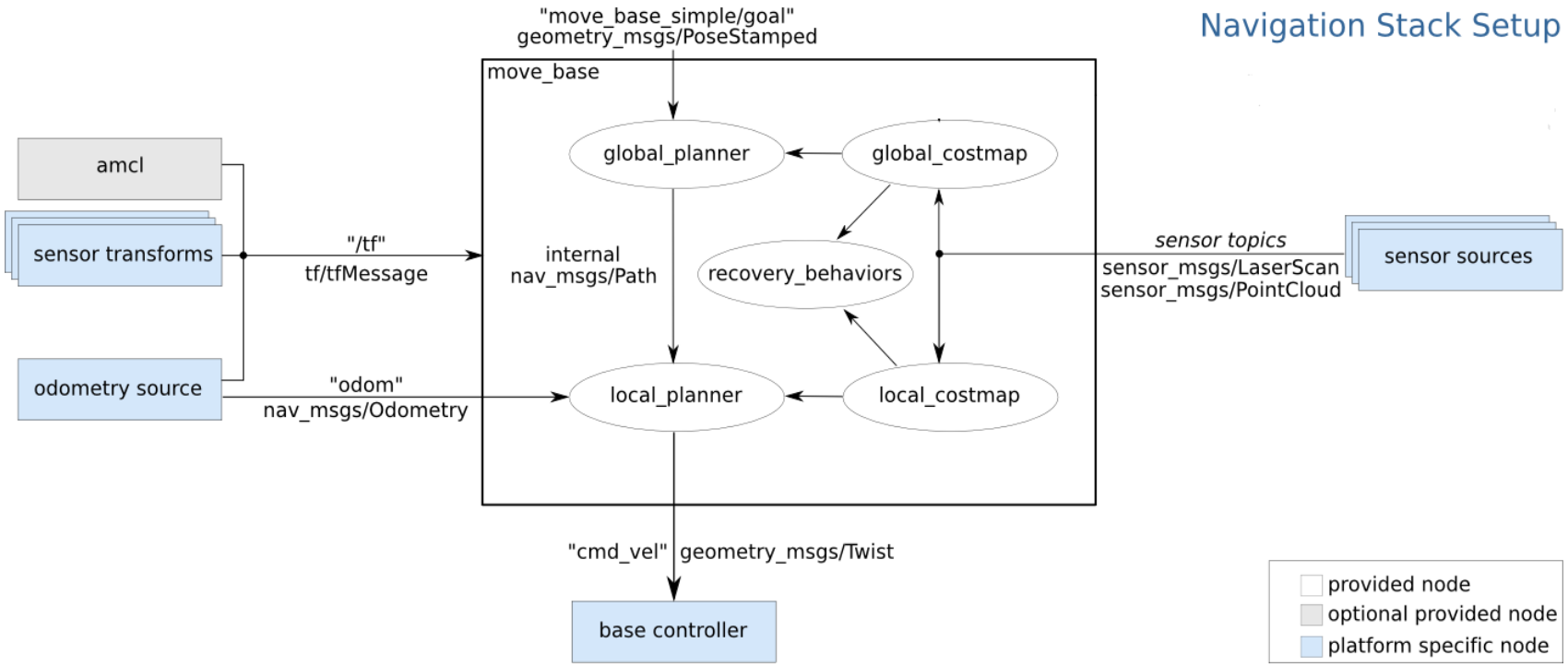

AGSE Electronics

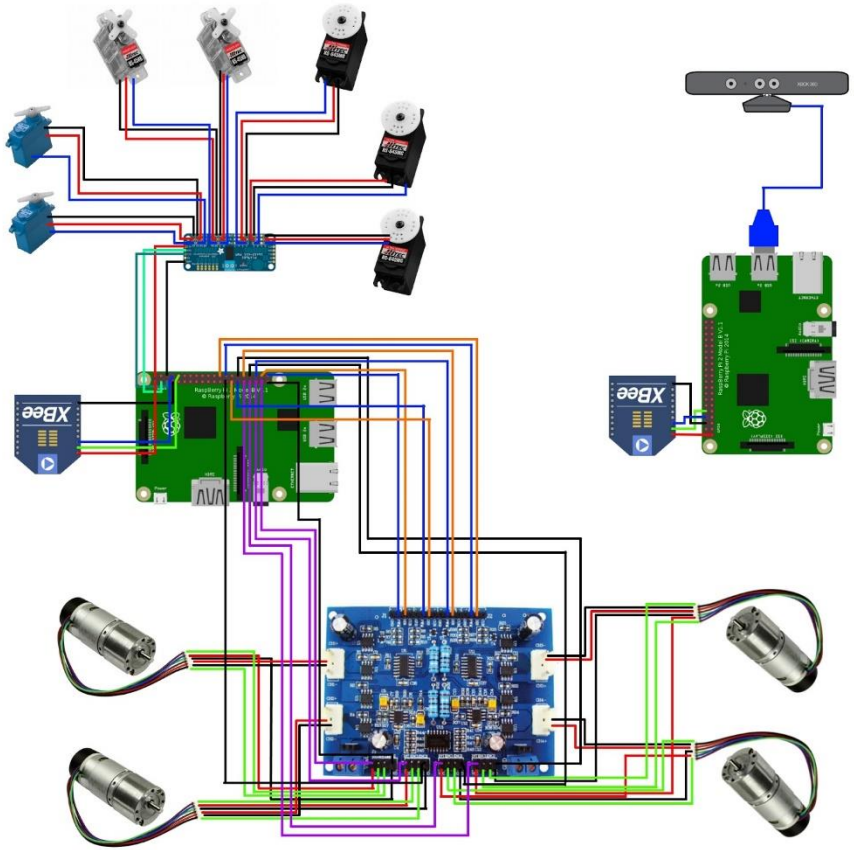

AGSE Containment

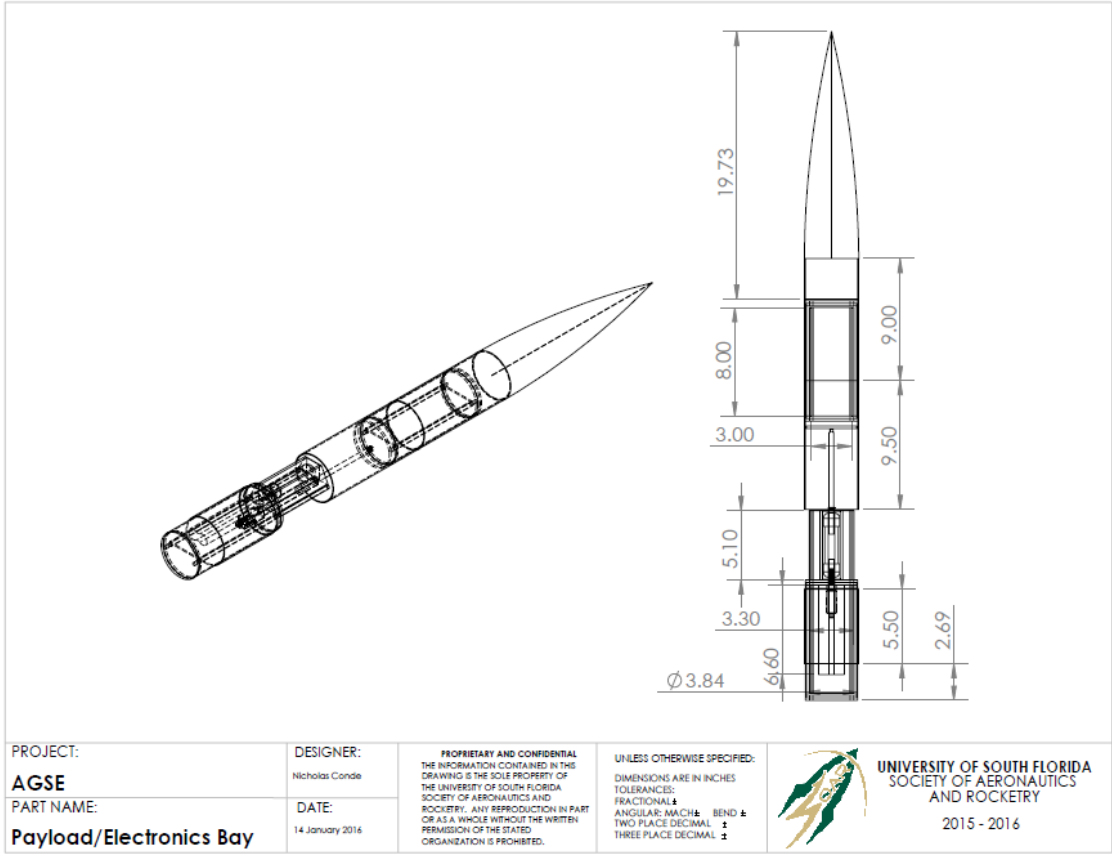

- Maintaining Contact throughout process
- Fiberglassing due to material tolerances

Testing and Verification

Requirement	Design and Verification
Autonomously Capture Payload	• Mechanical Arm and Rover Approach • Machine Vision Payload Detection • Test for Verification
Contain Payload Within Rocket	• Payload Bay Containment System • Sealable Door • Simulation and Test for Verification
Raise Rocket to 5 Degrees from Vertical	• Worm and Gear System • Calculations for Design • Test for Verification
Insert Igniter	• Linear Actuator on Rocket Blast Plate • Design and Test for Verification

PROJECT PLAN

Safety

- Before each launch the checklist and safety standards as set internally and by the Tripoli Rocket Association shall be rehearsed and understood by all attending members.
- Team Mentor Rick Waters will oversee all preparatory activity and directly handle black powder charges.
- A Failure Modes and Hazards Analysis Document has been completed and shall be updated throughout the course of the project.

Budget

BUDGET	Amount
Structure	$766.64
Recovery	$697.28
Propulsion	$710.85
AGSE	$2,761.80
Subscale	$1,175.58
Travel	$4,200.00
TOTAL	**$10,312.15**

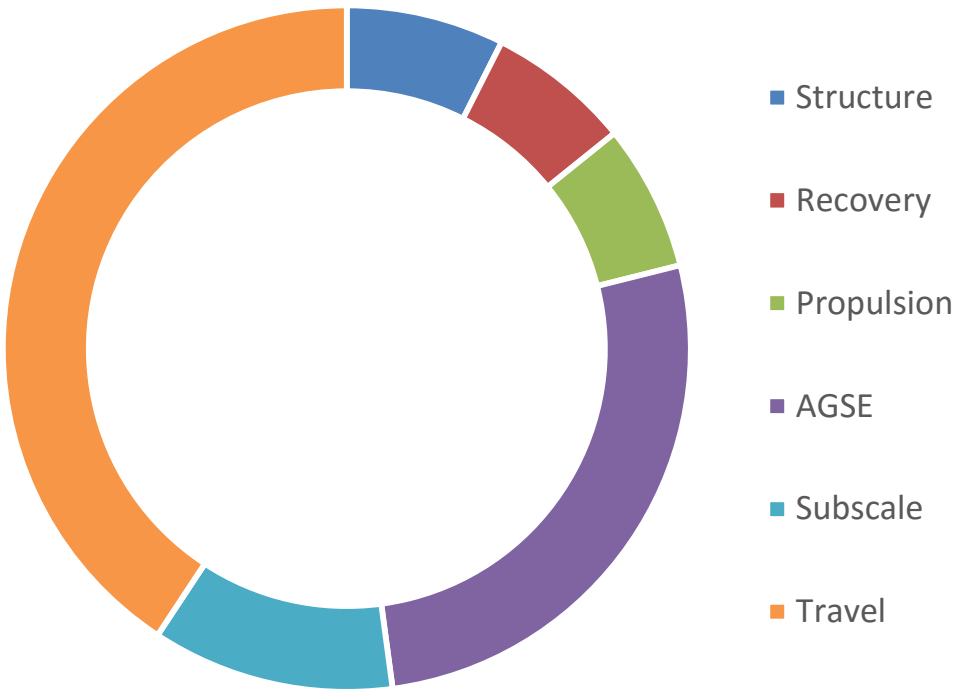

Educational Engagement

- **USF Engineering EXPO**
  - Engaging with students from Elementary through High School
  - STEM Education
  - Active engagement with rocket components
  - Introduction to local High Powered Rocketry Community

Next Steps

- Conclude Final Design Paint
- Continue Discrete component testing
- Continue AGSE development and testing
- Continue Education Engagements
- Get ready for Huntsville!

QUESTIONS?