University of South Florida
Society of Aeronautics and Rocketry

Preliminary Design Report

NASA Student Launch Initiative // MAV Challenge

Agenda

Project Overview
- Mission Overview
- Vehicle Overview
- AGSE Overview

Vehicle Criteria
- Subsystems
- Motor Selection
- Simulations
- Testing and Verification Plans

AGSE Overview
- Subsystems
- Testing and Verification Plans

Project Plan
- Safety
- Budget
- Educational Assessment
- Schedule
- Next Steps

PROJECT OVERVIEW

Mission Overview

Launch Vehicle Mission

"USF SOAR will develop a high powered rocket using an L class motor to achieve an exact altitude of 5,280 feet. All components will be safely recovered. During the process, USF SOAR will focus on developing outreach for STEM programs and become familiar with project life cycle as used in NASA operations."

AGSE Mission

"As part of the Mars Ascent Vehicle Challenge USF SOAR will develop an Autonomous Ground Support Equipment (AGSE) System responsible for the retrieval of a "payload" located on the ground and the transportation of said payload from the ground to the rocket. With the payload secured inside the rocket, the AGSE system is then responsible for orienting the rocket properly for launch and initiating the launch process, emulating the conditions on Mars in it's design principle."

Vehicle Overview

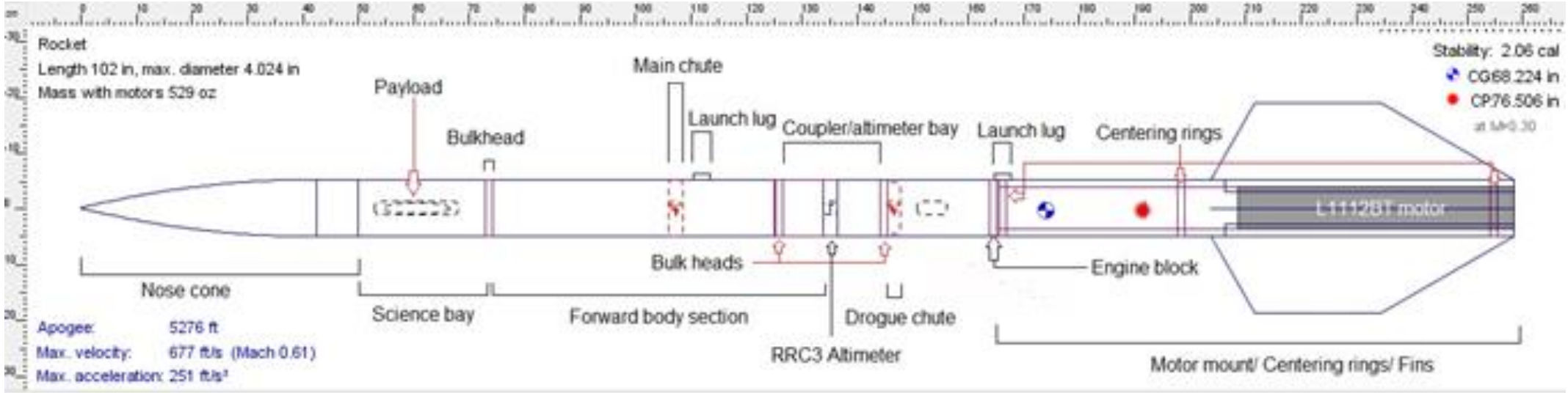

Vehicle Overview

Dimensions

- Length: 102 inches
- Diameter: 4 inches
- Weight (Loaded/Dry): 529 oz/451 oz

Materials

- G12 Fiberglass Airframe
- G10 Fiberglass Fins
- Phenolic Couplers
- Baltic Birch Bulkheads and Couplers
- Plastic Nosecone

AGSE Overview

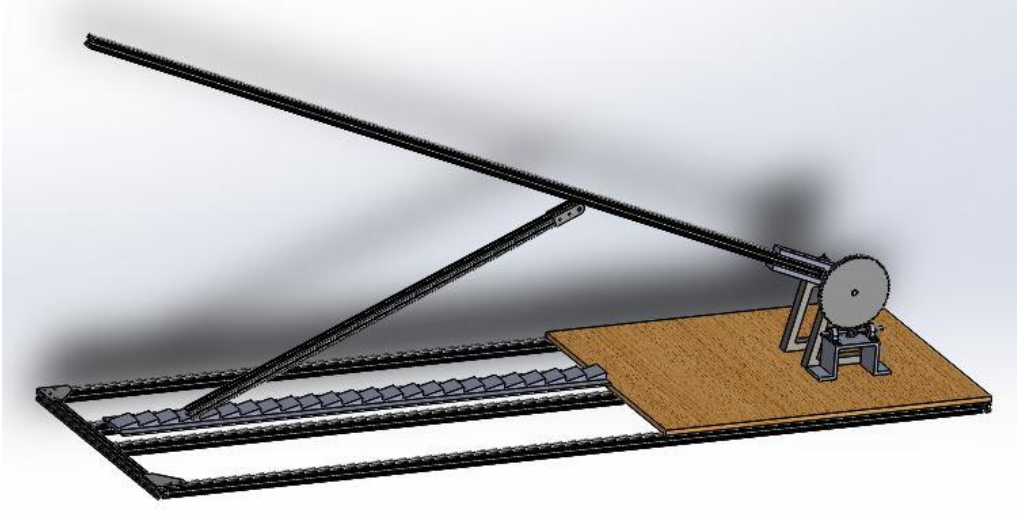

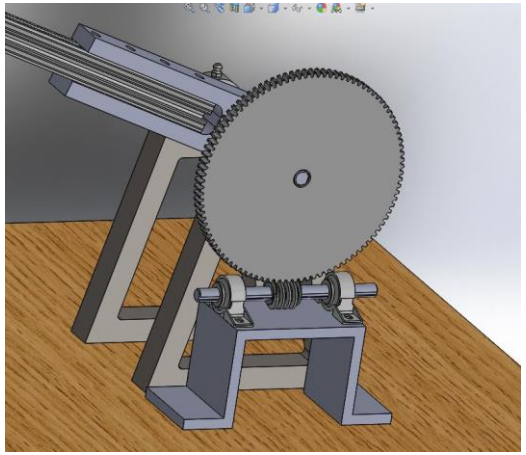

AGSE Overview

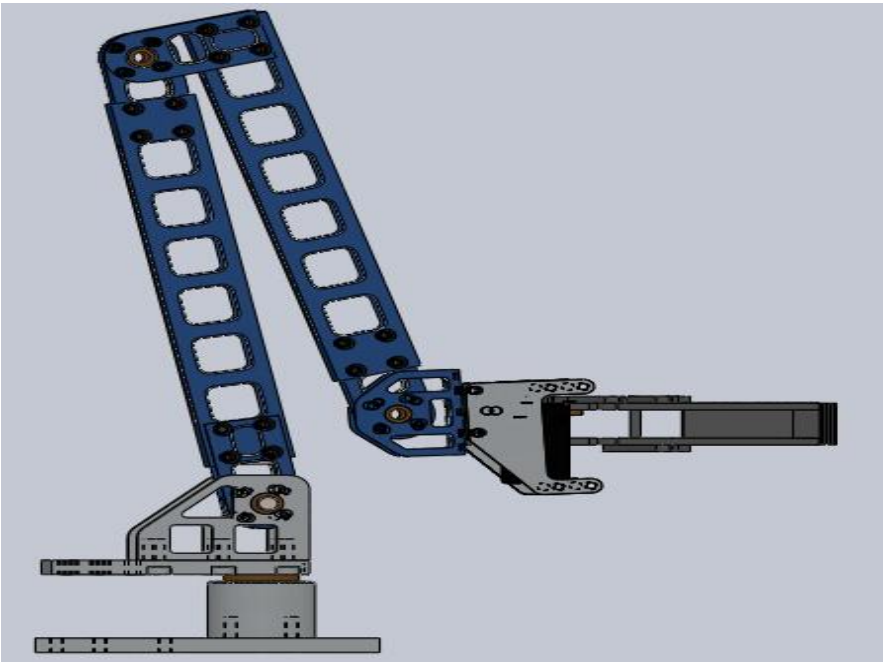

VEHICLE OVERVIEW

Subsystems (Airframe)

G12 Fiberglass Sections

- Payload Bay: 12 inches
- Fore Airframe: 24 inches
- Aft Airframe: 48 inches

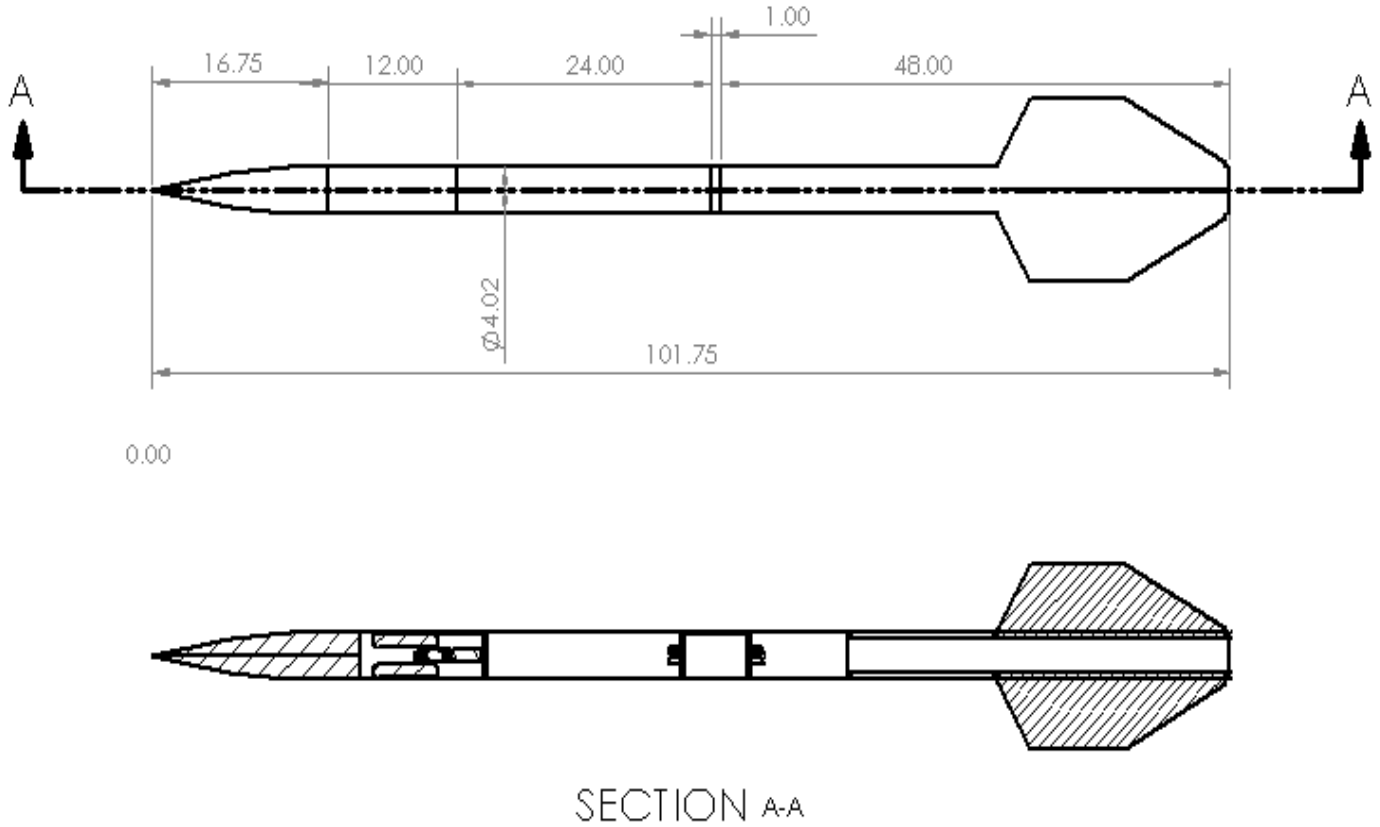

Subsystems (Altimeter Bay)

- 6” Phenolic Coupler
- Baltic Birch Bulkheads
- RRC3 Altimeters
- Black Powder Charges

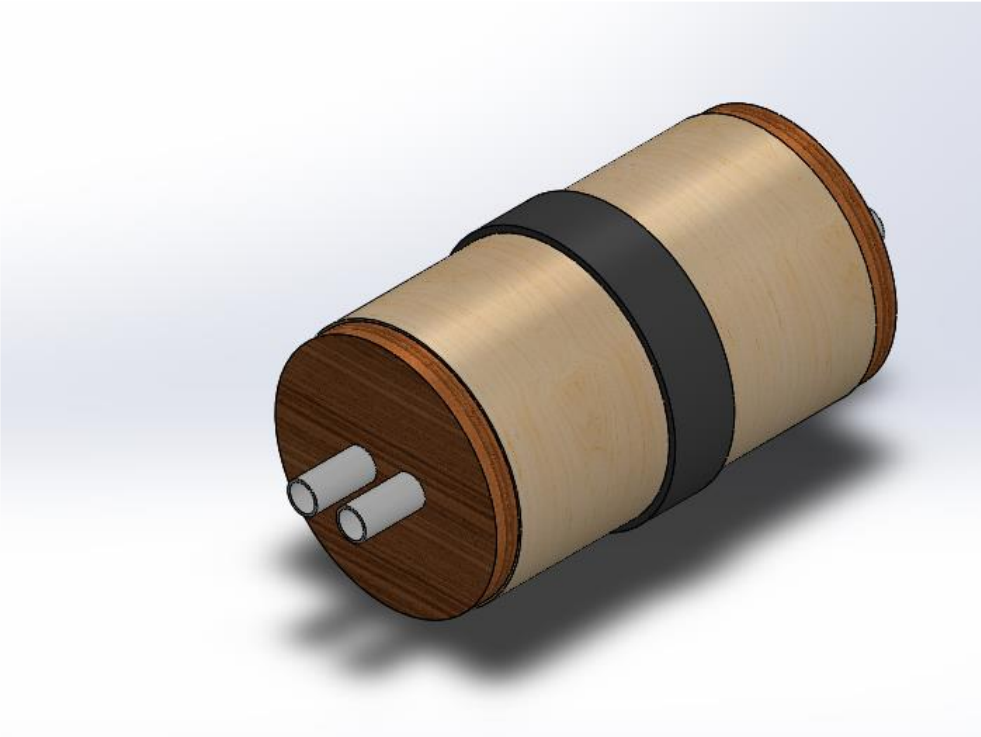

Subsystems (Motor Can)

- 75 mm Motor Mount
- Baltic Birch Centering Rings
- 30 Minute Epoxy
- Epoxy Fillets on all Connected Surfaces with Silica Blend

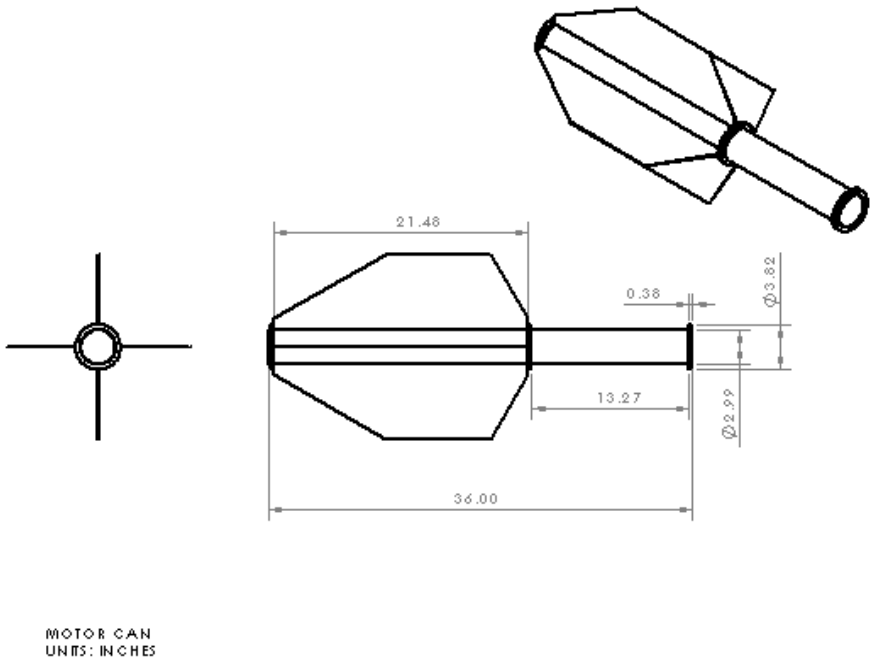

Subsystems (Fins)

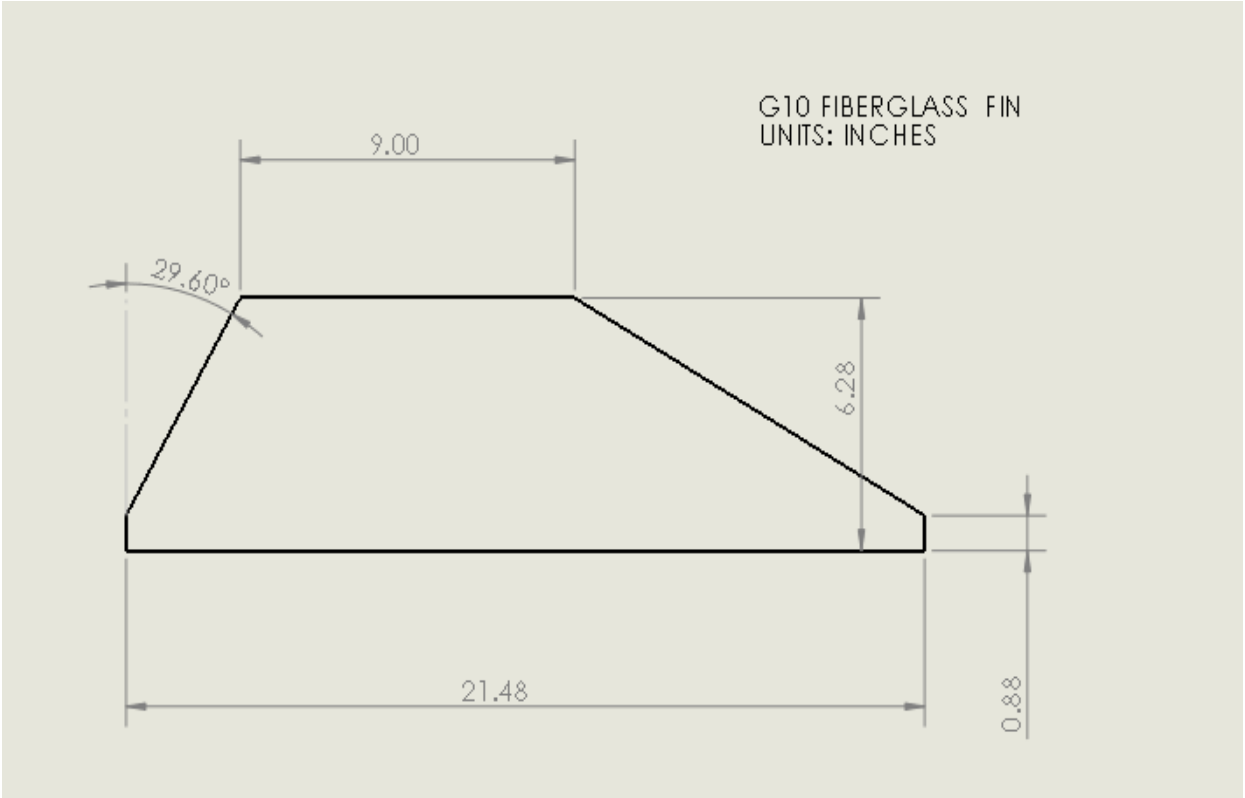

Subsystems (Recovery)

- Dual Deployment with Drogue at Apogee and Main at 500 feet with black powder charge seperation
- Sky Angle Cert 3 Parachutes
- **Main**
  - XLarge 89 sq. ft, Descent Velocity 15.9 ft/s
- **Drogue**
  - Drogue 6.3 sq. ft, Descent Velocity 90.4 ft/s

Subsystems (Recovery)

- Kinetic Energy at Impact in ft-lbm

Subsection	Kinetic Energy
Nosecone/Payload	14.46836733
Fore Airframe	18.69298993
Aft Airframe	64.39932374

Motor Selection

- Gorilla Motors L1112BT
- Total Impulse: 3709 N-s
- Max Thrust: 1297 N
- Thrust/Weight Ratio: 8.823
- Rail Exit Velocity: 77.9 ft/s

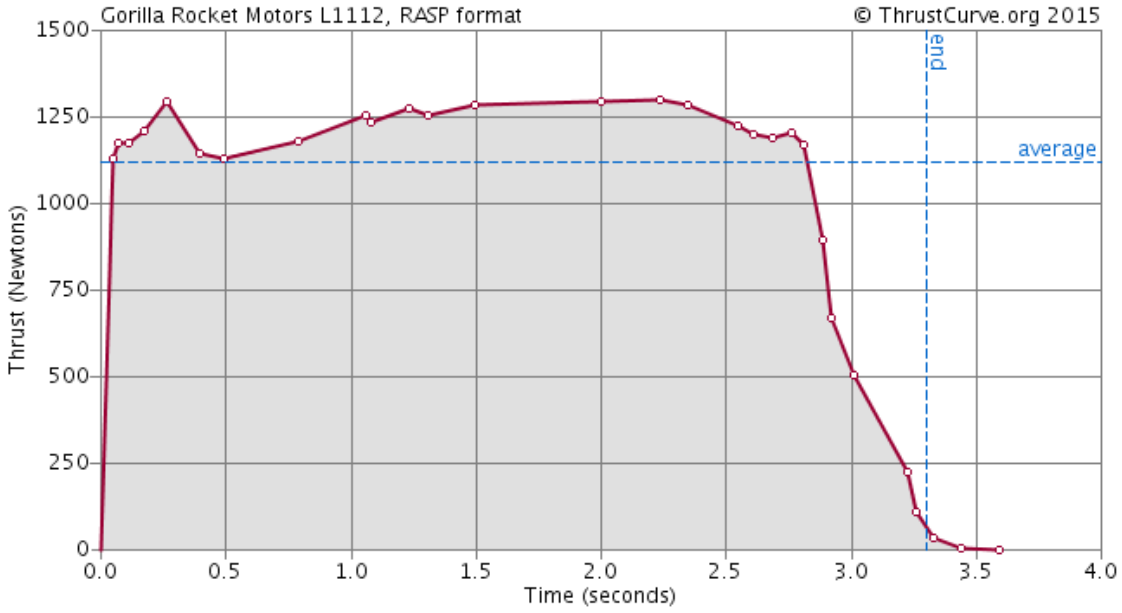

Simulations (Stability)

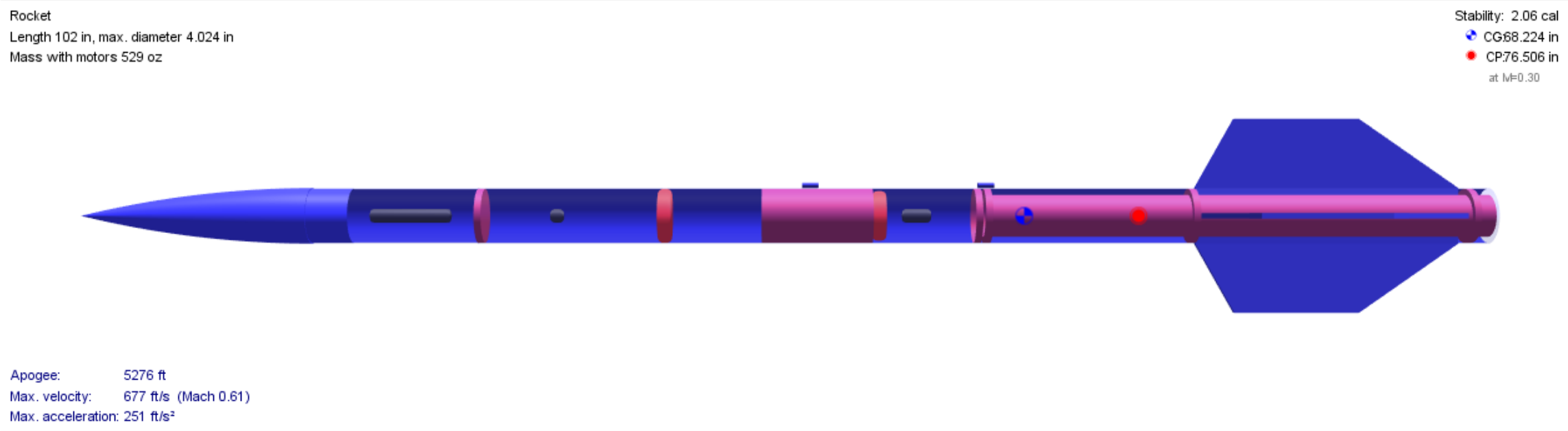

Simulations (Stability)

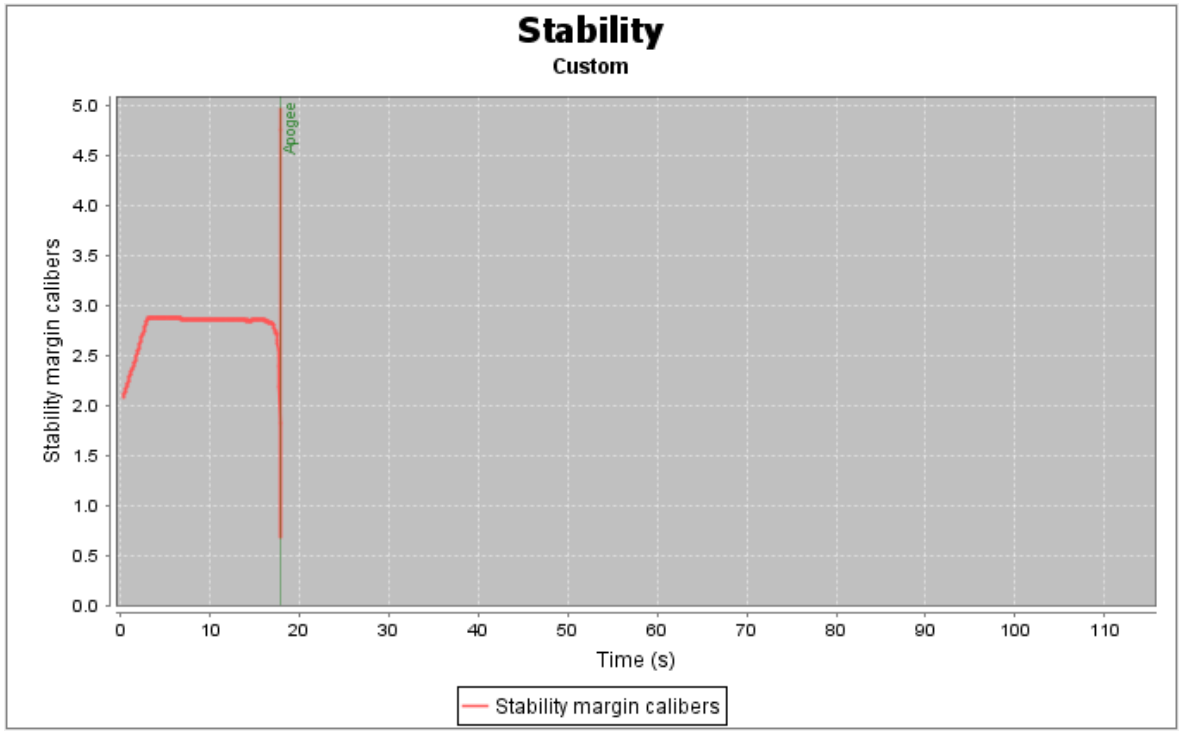

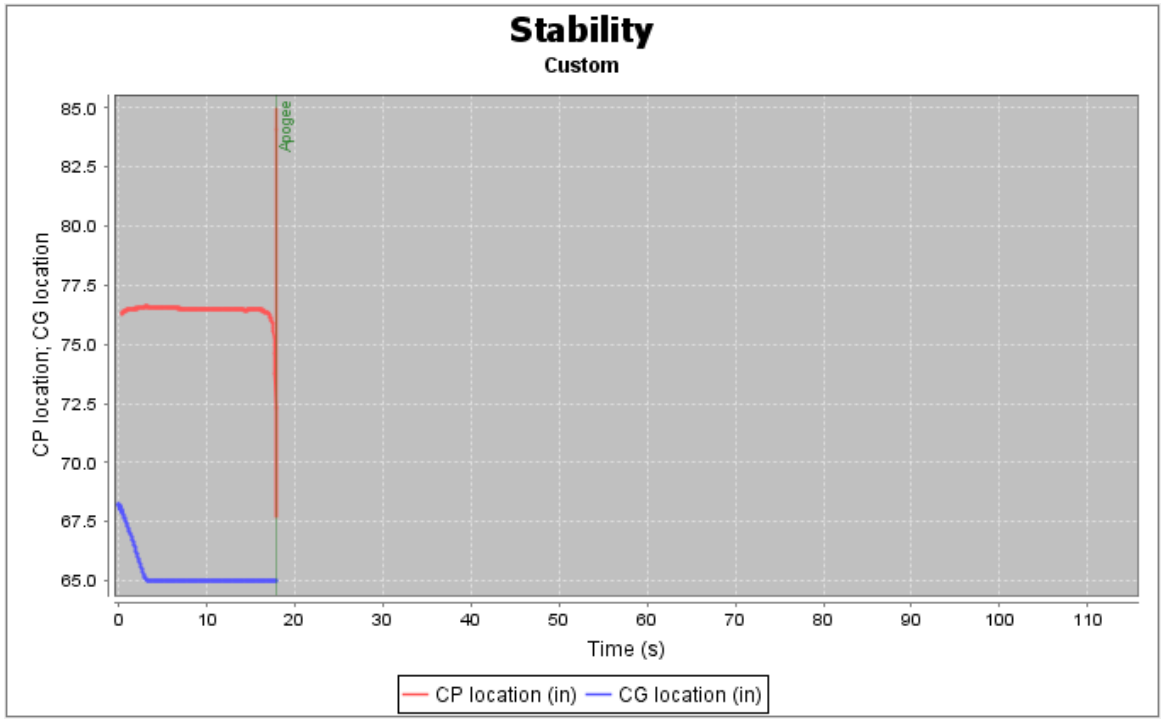

Simulations (Mission Performance)

- Apogee:
  5280 feet
- Drogue Deployment:
  17.9 s
- Main Deployment:
  85 s
- Max Velocity:
  678 ft/s
- Impact Velocity:
  15.9 ft/s
- Max Acceleration:
  252 ft/s^2

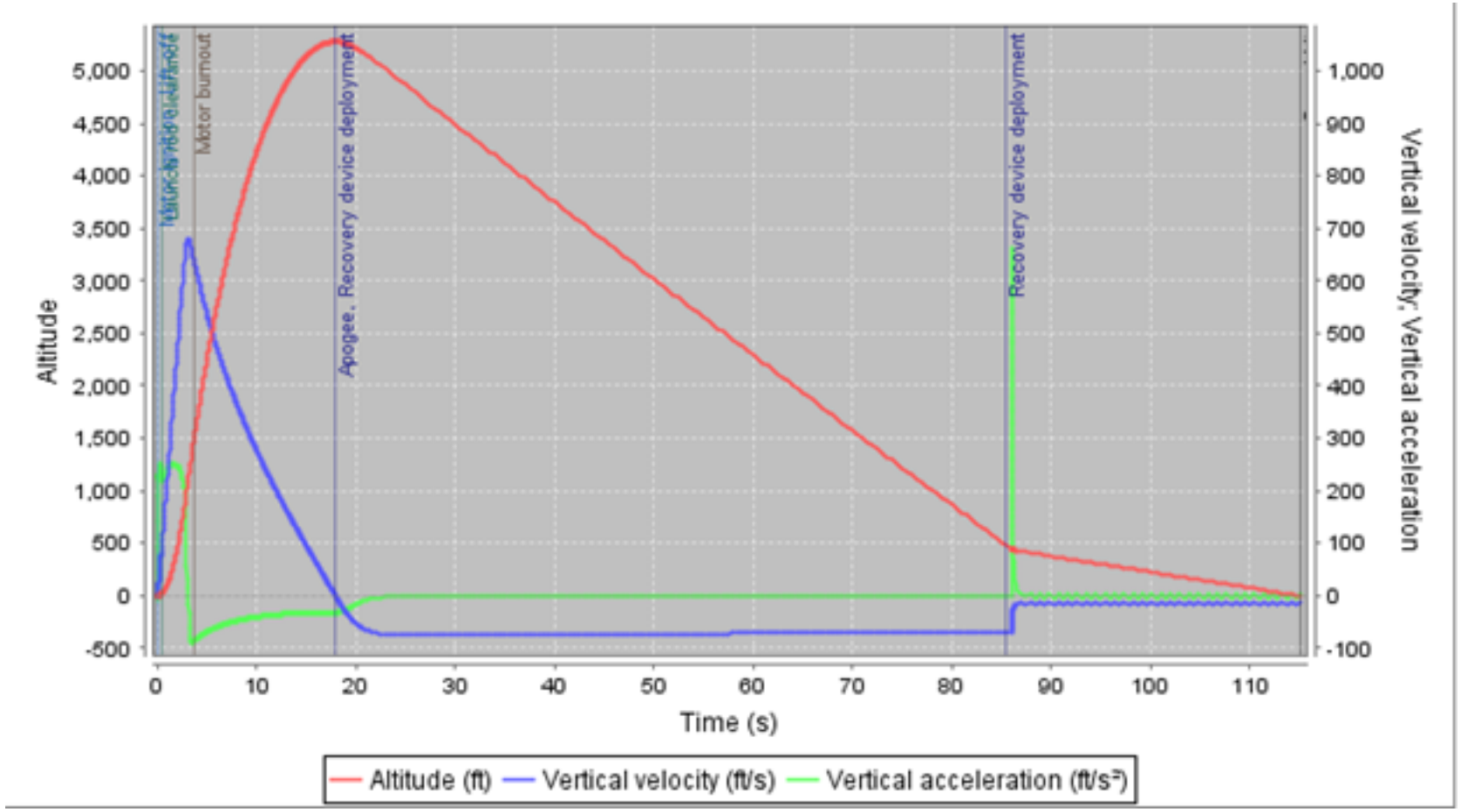

Testing and Verification

Requirement	Design and Verification
All teams shall successfully launch and recover their full-scale rocket prior to FRR in its final flight configuration.	• Design a 3:4 scale rocket • Run OpenRocket Simulation • Perform Mission Analysis Post-Flight
Prepare Launch Vehicle within 2 Hours	• Practice Vehicle Preparation with Checklists • Inspect for potential delays
The vehicle shall deliver the payload to an apogee altitude of 5,280 feet above ground level (AGL).	• Design for altitude • Motor Selection • OpenRocket Simulation • Test Flight
The launch vehicle shall be designed to be recoverable and reusable.	• Design for reusability • Inspect Recovery Systems
Recovery system successfully cause separation and the ejection of both the drogue and main chutes.	• Design for recovery • Test black powder charges prior to launch • Ensure proper parachute packing. • Inspect for verification

AGSE OVERVIEW

Subsystems (Capture)

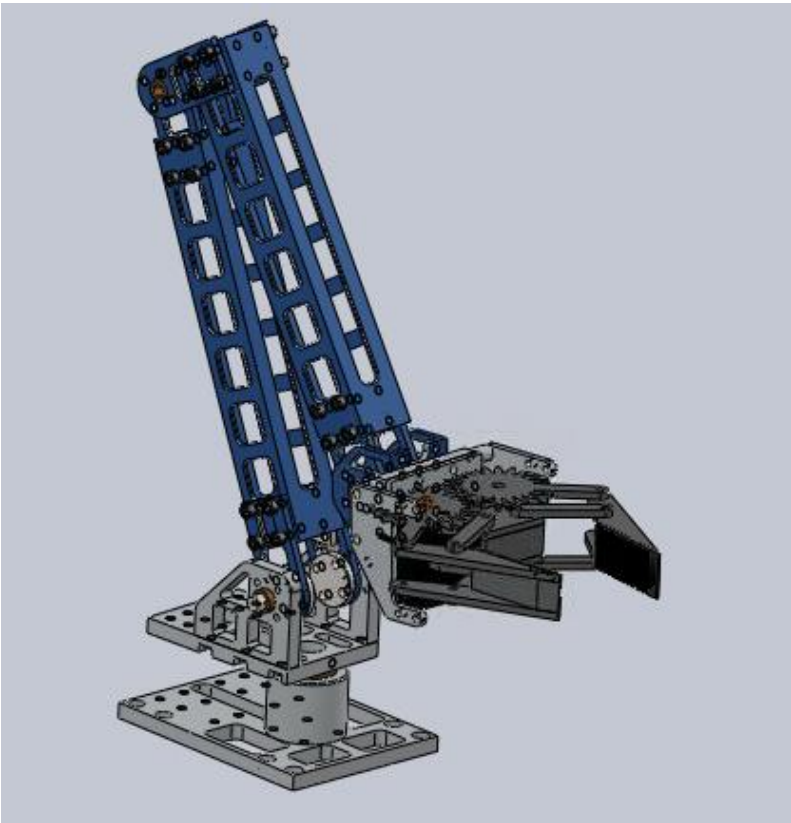

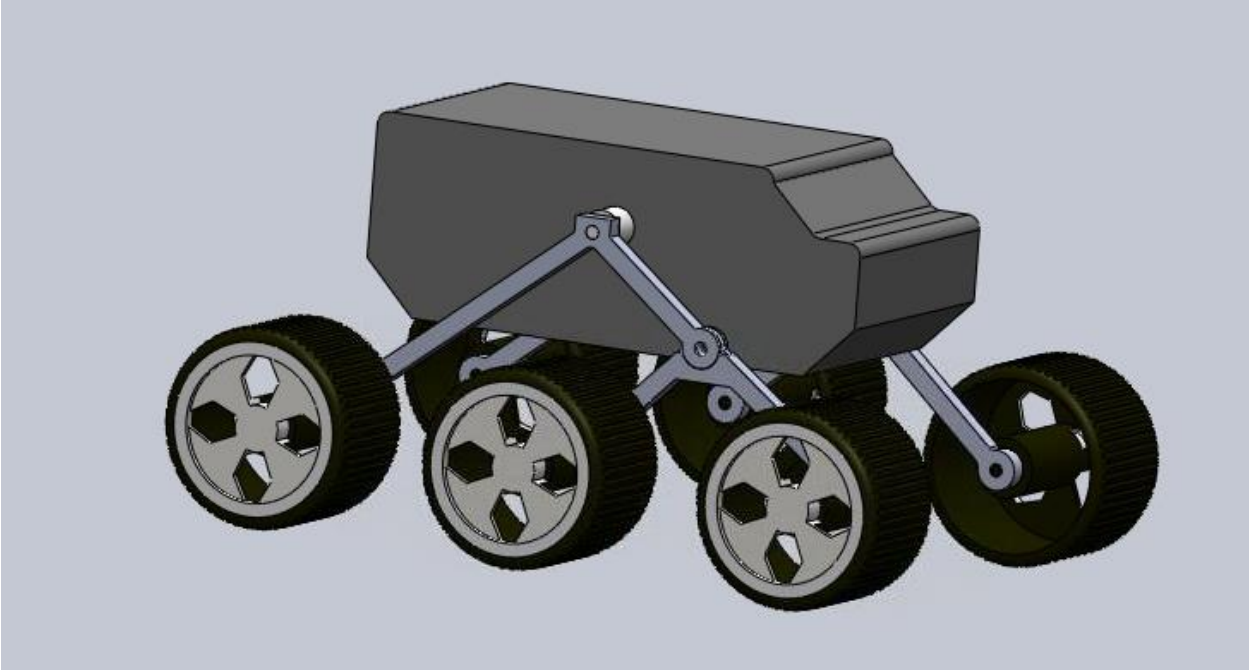

Subsystems (Capture)

- Payload Approach through Rover
- OpenCV Machine Vision Detection and Verification
- Mechanical Arm and Gripper Interaction
- Rocket Approach and Positioning

Subsystems (Containment)

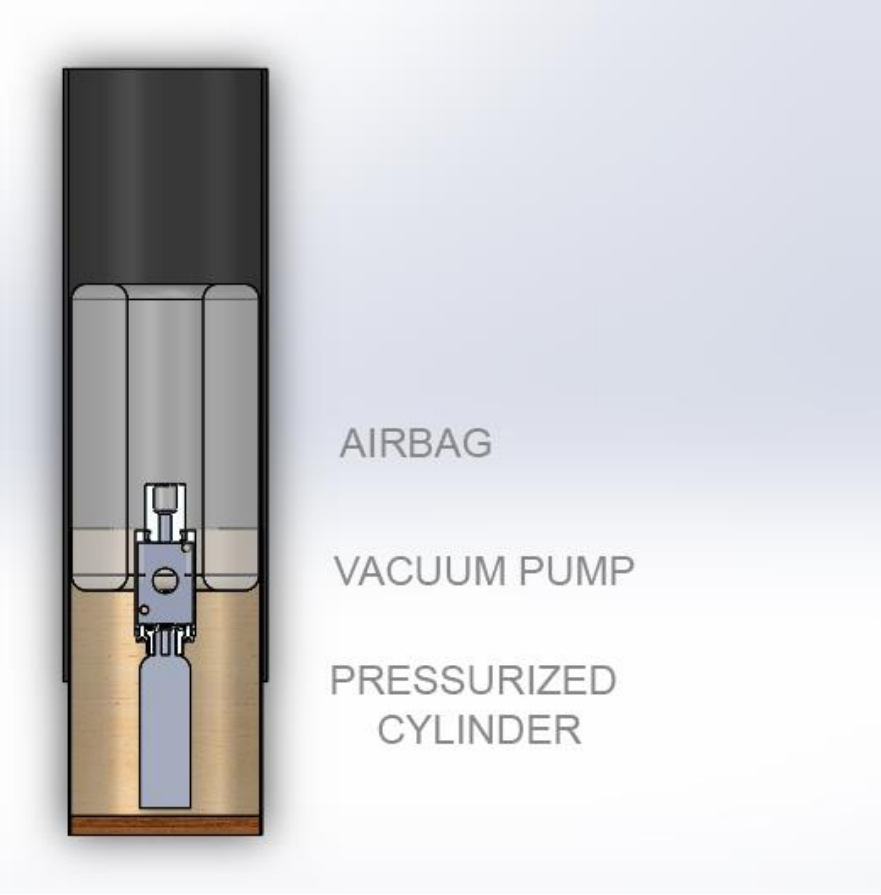

Payload Bay Options

- Foam Padding and Hatch Door
- Bistable Compliant Mechanism
- Closed Circuit Pneumatic Containment

Subsystems (Rail)

- Worm and Gear System
- Ratcheting Safety Interlock
- Igniter Installation through Linear Actuator in Blast Plate

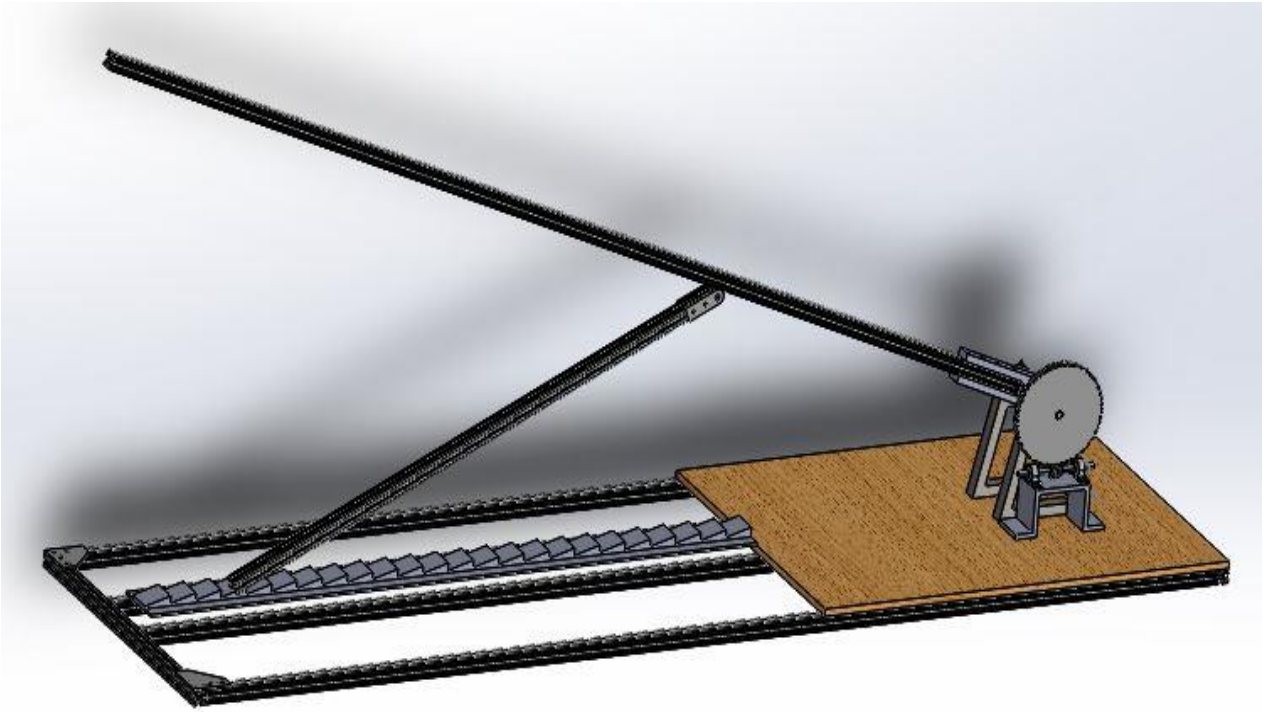

Testing and Verification

Requirement	Design and Verification
Autonomously Capture Payload	• Mechanical Arm and Rover Approach • Machine Vision Payload Detection • Test for Verification
Contain Payload Within Rocket	• Payload Bay Containment System • Sealable Door • Simulation and Test for Verification
Raise Rocket to 15 degrees from Vertical	• Worm and Gear System • Calculations for Design • Test for Verification
Insert Payload	• Linear Actuator on Rocket Blast Plate • Design and Test for Verification

PROJECT PLAN

Safety

- Before each launch the checklist and safety standards as set internally and by the Tripoli Rocket Association shall be rehearsed and understood by all attending members.
- Team Mentor Rick Waters will oversee all preparatory activity and directly handle black powder charges.
- A Failure Modes and Hazards Analysis Document has been completed and shall be updated throughout the course of the project.

Budget

System	Cost
Structure	$827.09
Recovery	$427.66
Propulsion	$1,242.00
AGSE	$2,369.75
Subscale	$1,282.18
TOTAL	$6,242.08

Educational Engagement

- Active involvement in programs such as Great American Teach In
- Approaching local schools to raise interest and knowledge in STEM through relation to our current projects and hands on activities
- Involvement in USFs Engineering EXPO outreach event to numerous local students

Schedule

Event	Dates
Subscale Fabrication	11/8 – 12/11
Subscale Launch	12/12 & 12/19
Full Scale Fabrication	1/8 – 2/19
Full Scale Test Launch	2/20
AGSE Fabrication	11/8 – 2/12
AGSE Testing	2/13 – 3/5

Next Steps

- Develop Final Design
- Complete Subscale Fabrication
- Test Subscale (12/12 & 12/19)
- Continue AGSE Design

QUESTIONS?